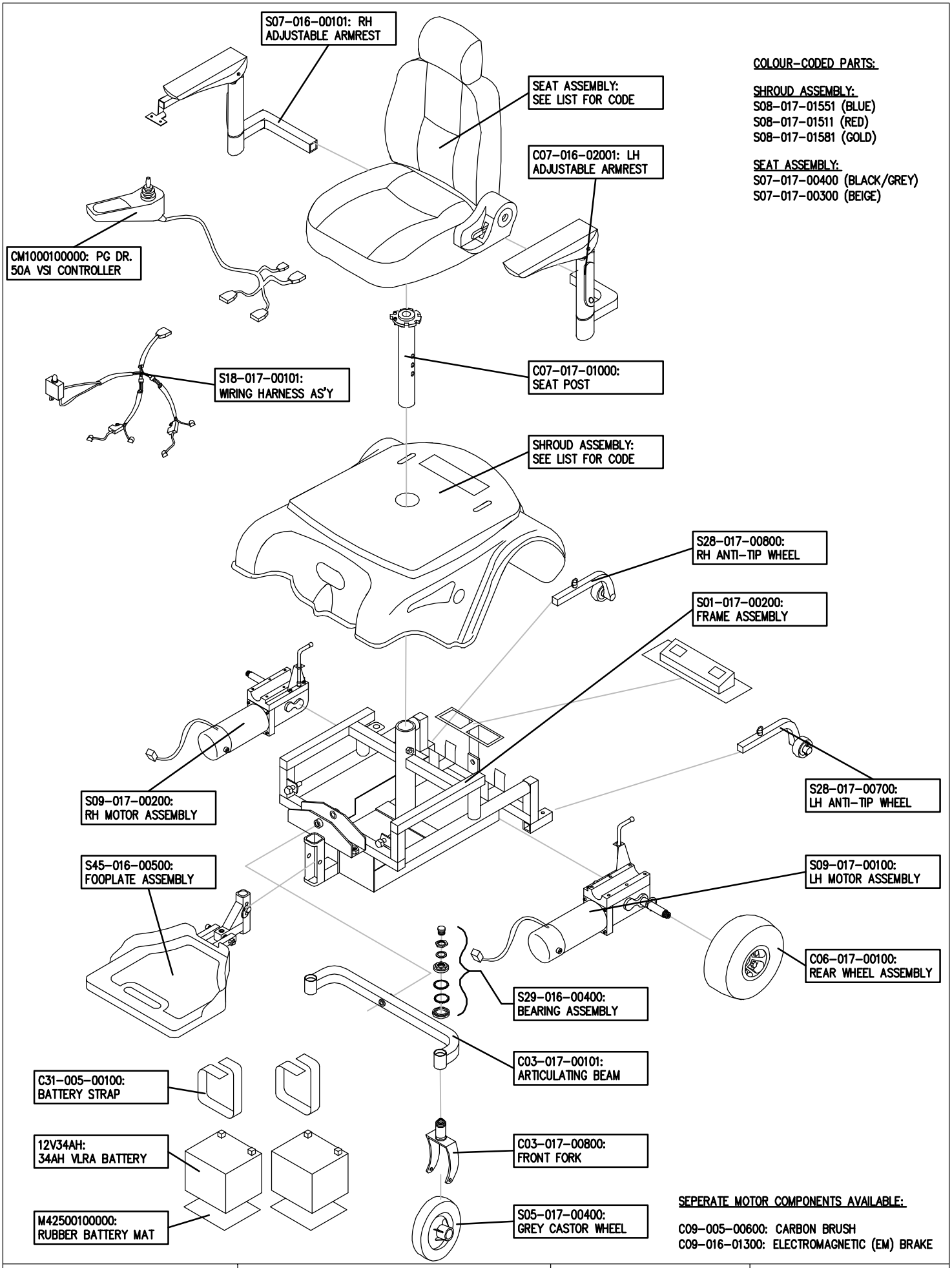

COLOUR-CODED PARTS:

SHROUD ASSEMBLY:
S08-017-01551 (BLUE)
S08-017-01511 (RED)
S08-017-01581 (GOLD)

SEAT ASSEMBLY:
S07-017-00400 (BLACK/GREY)
S07-017-00300 (BEIGE)

SEPERATE MOTOR COMPONENTS AVAILABLE:

C09-005-00600: CARBON BRUSH
C09-016-01300: ELECTROMAGNETIC (EM) BRAKE

medicaretechnology LIMITED
Ainley's Industrial Estate, Elland HX5 9JP
T: +44 (0) 1422 314488
E: enquiries@medicaretechnology.com
W: www.medicaretechnology.com/technical

TITLE:	DATE: 19/03/07	SHEET No: 1 of 1
MAMBO MINI (PCMM001) PARTS CATALOGUE	DRAWN: PMK / CHECKED:	REVISION No: –
	SCALE: NTS	DWG No: Z21096